Calbrite™

Stainless Steel Conduit Systems

Stainless Steel Strut Clamps

Features:

- Manufactured in type 316 stainless steel to meet any stringent sanitary condition
- Polished with standard "brite" finish to increase corrosion resistance and aesthetic appearance
- Designed for use with 1-5/8” stainless channel
- No package qty. required
- Type 316 stainless steel nut & bolt included

Certifications and Compliances:
Calbrite stainless steel strut clamps are fabricated to UL and ASTM A167, F593 standards

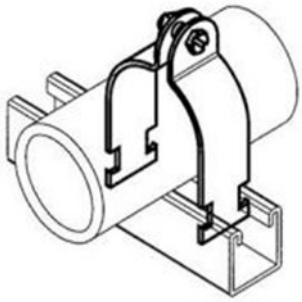

Applications:
Used at any point along the slot side of the channel and are inserted into the two channel returns. Designed for use in standard 1-5/8” channels. Supplied with stainless nut and bolt.

Industries Commonly Served:

- Food & Beverage Production & Distribution
- Chemical Plants
- Water & Wastewater Treatment
- Pharmaceuticals & Cosmetics
- Refining & Extraction Sites
- Petrochemical Operations
- Marine & Coastal Facilities
- Pulp and Paper Mills
- Along with other corrosive environments

Size	Part Number	Material Thickness	Design Load (lbs.)	Bolt Size	Weight per 100 (lbs.)
½”	S60500SC00	0.060”	400	¼ -20 x ¾”	12
¾”	S60700SC00	0.060”	600	¼ -20 x ¾”	14
1"	S61000SC00	0.075”	600	¼ -20 x ¾”	16
1-1/4"	S61200SC00	0.075”	600	¼ -20 x ¾”	19.5
1-1/2”	S61500SC00	0.105”	800	5/16-18 x 1”	20
2”	S62000SC00	0.105”	800	5/16-18 x 1”	31
2-1/2”	S62500SC00	0.105”	800	5/16-18 x 1”	35
3”	S63000SC00	0.105”	800	5/16-18 x 1”	41
3-1/2”	S63500SC00	0.120”	1000	3/8-16 x 1-1/4”	50
4”	S64000SC00	1.120”	1000	3/8-16 x 1-1/4”	62

All dimensions are for informational purposes only *Tolerances +/- 5%